S-MATE2(EN)

eWeLink-Remote Switch Mate

User Manual V1.0

Introduction

S-MATE2 is a battery-powered switch that can be used to connect ordinary rocker or pulse switches without the need for a neutral line. It can be used as an eWeLink-Remote sub-device and added to the eWeLink-Remote gateway for local control. In addition, it can achieve smart device linkage by setting up smart scenes.

ITEAD - 苏登(2988816)

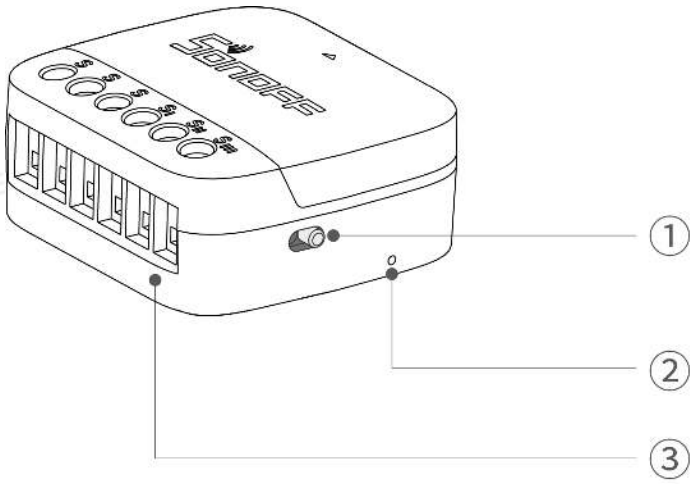

① **DIP Switch**

② **LED Indicator**

- Flash once quickly：External switch status changes
- Flash 3 times quickly：External switch type is successfully switched
- Flash 3 times quickly：External switch status changes and the device is in a low battery state

③ **Wiring ports**

DIP Switch

The factory default mode of this device is Rocker switch mode（Figure①）. If the device is connected to a momentary switch, please turn the dip switch to the left（Figure②）, the LED indicator will flash 3 times quickly after the switch mode is successfully switched.

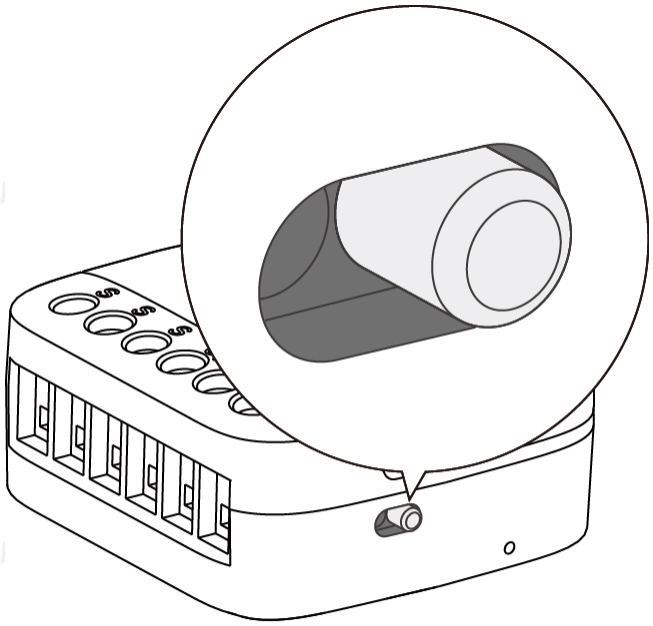

Figure① Rocker switch mode

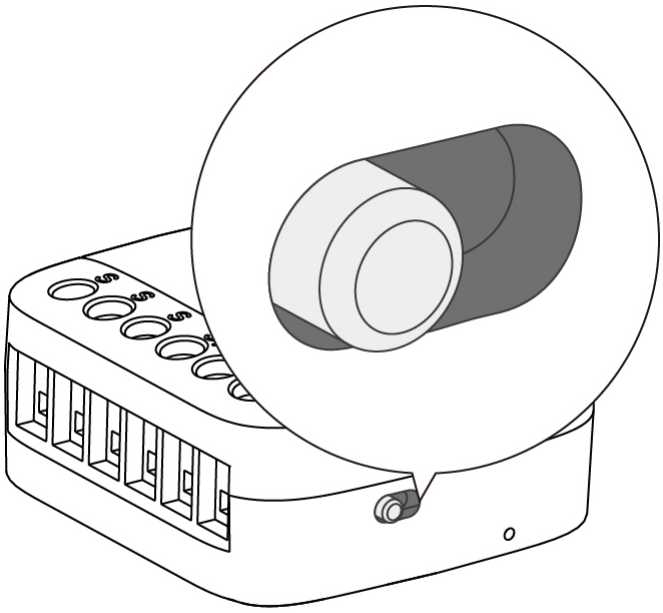

Figure② Momentary switch mode

Specification

Model	S-MATE2
MCU	AK803
Input	3.0V ⎓
Wireless Connectivity	2.4G
Battery Model	CR2477
Net Weight	26.8g
Dimension	40.3x37.4x18.3mm
Color	White
Casing Material	ABS
Applicable Place	Indoor
Working Temperature	-10℃~40℃
Working Humidity	5%~95% RH，non-condensing
Certified Compliance	CE/FCC/ISED/RoHS

Installation

1. Take out the battery insulation sheet.

ITEAD - 苏登(2988816)

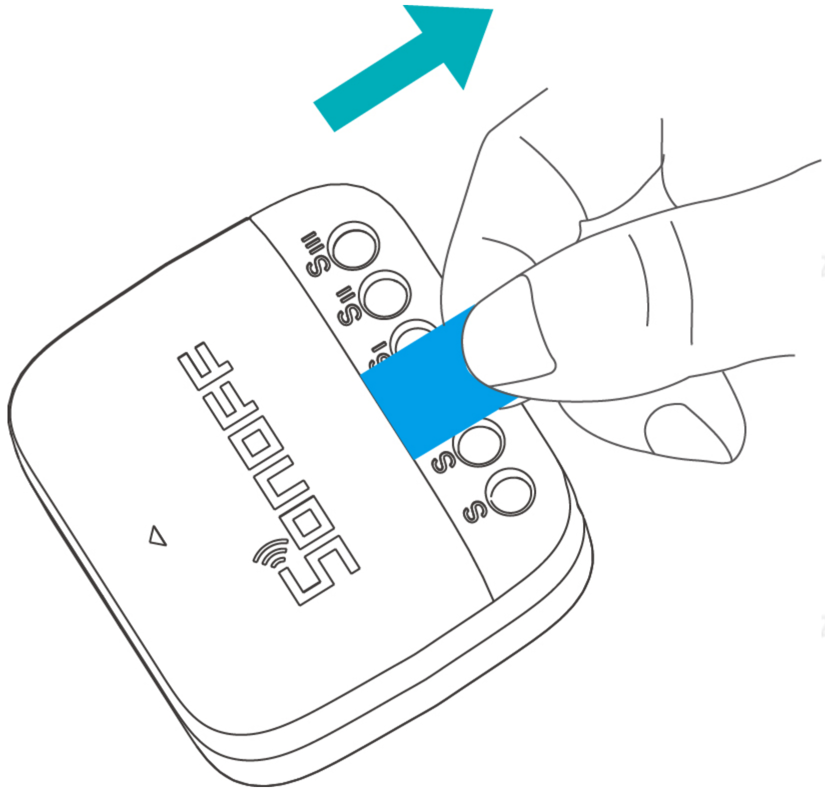

2. Power off

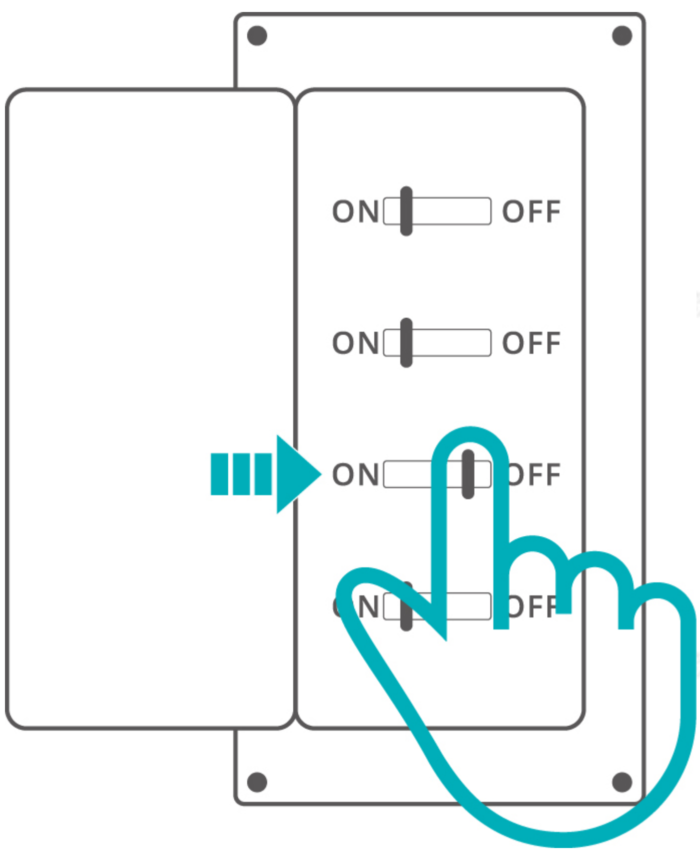

ITEAD - 苏登(2988816)

*Please install and maintain the device by a professional electrician. To avoid electric shock hazard, do not operate any connection or contact the terminal connector while the device is powered on!

3. Wiring instruction

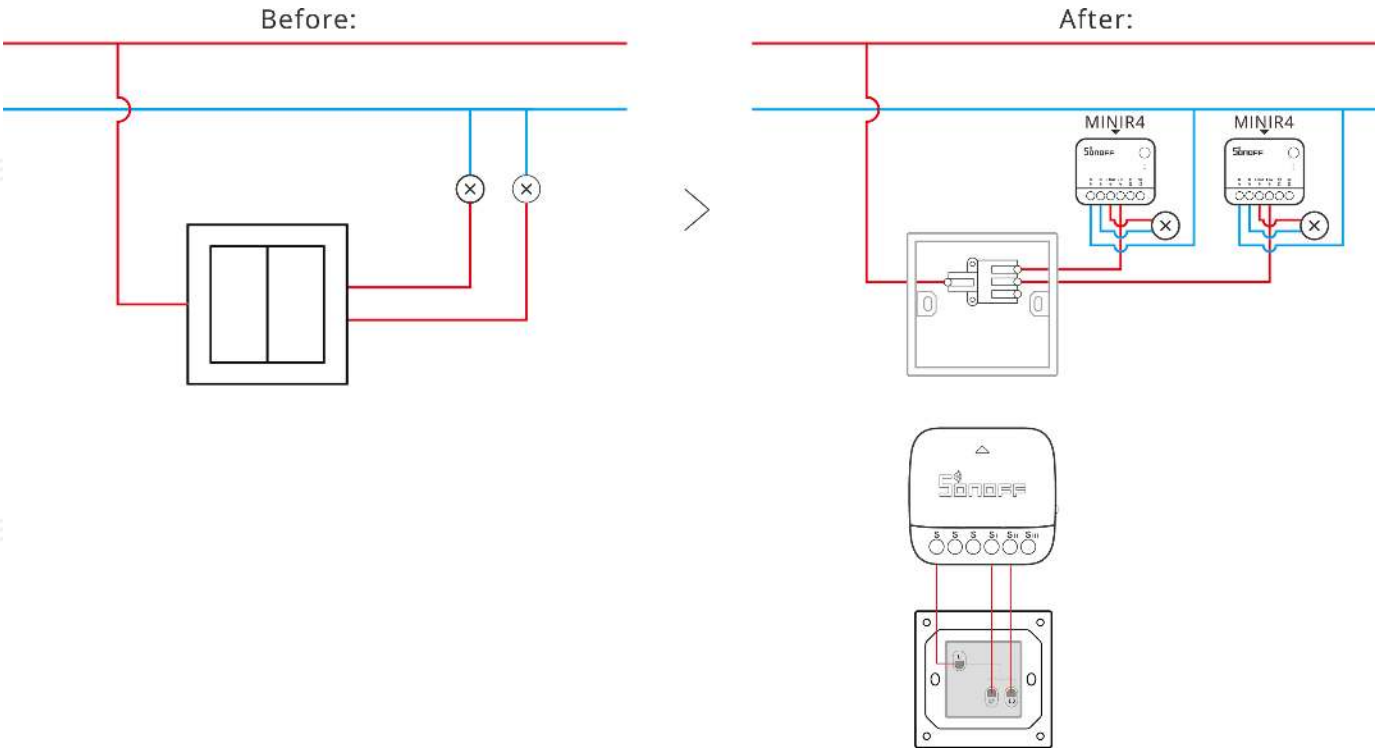

* S-MATE2 needs to work with eWelink remote gateway. (Here MINIR4 acts as the eWelink remote gateway.)

Add device

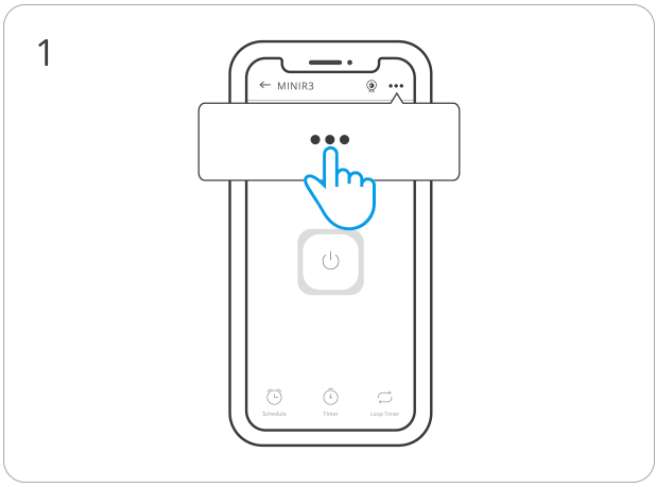

Click "..." on the homepage of the supporting gateway

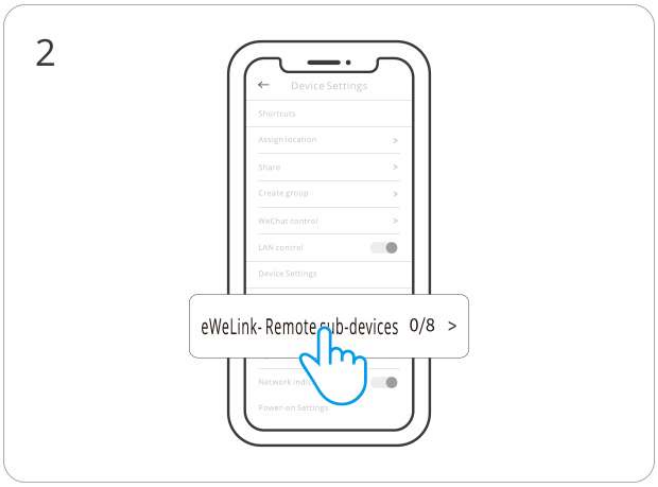

Click "eWeLink–Remote–devices" in the Device Settings

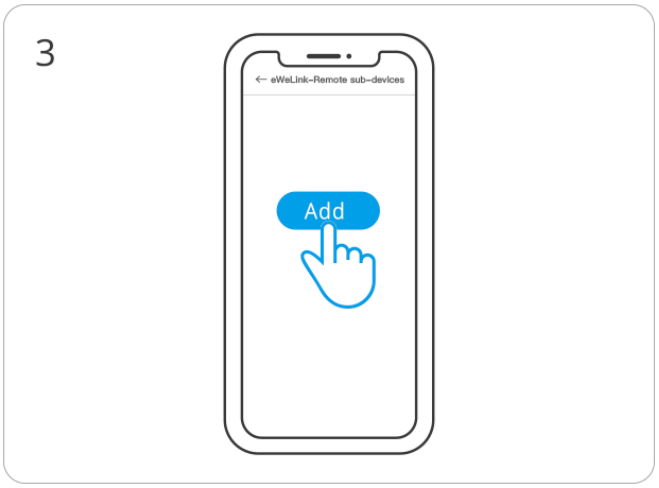

Click "Add" button, and eWeLink–Remote gateway will enter the learning mode

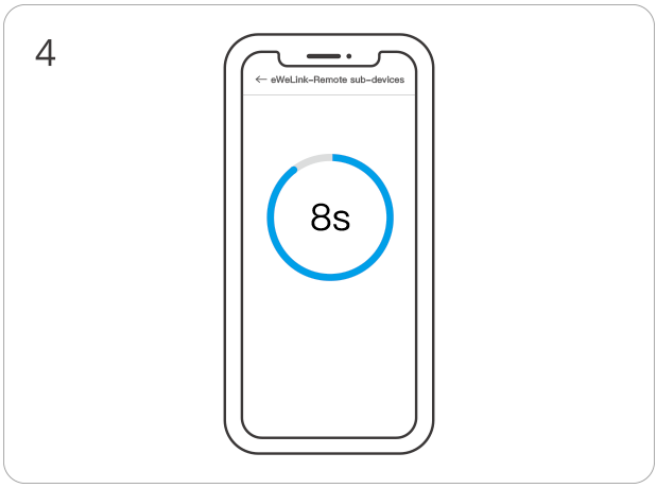

Click the sub–device button within 10 seconds

ITEAD - 苏登(2988816)

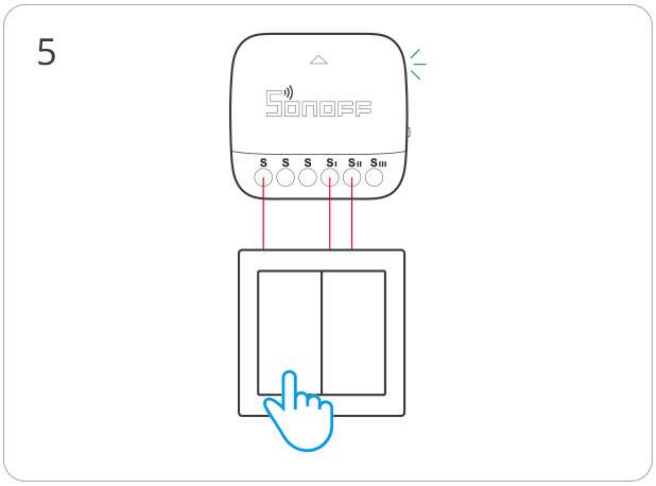

Click the button on the sub-device to add the device

Smart Scenes

The eWeLink-Remote sub-device can only be used as a triggering device, rather than an executing device.

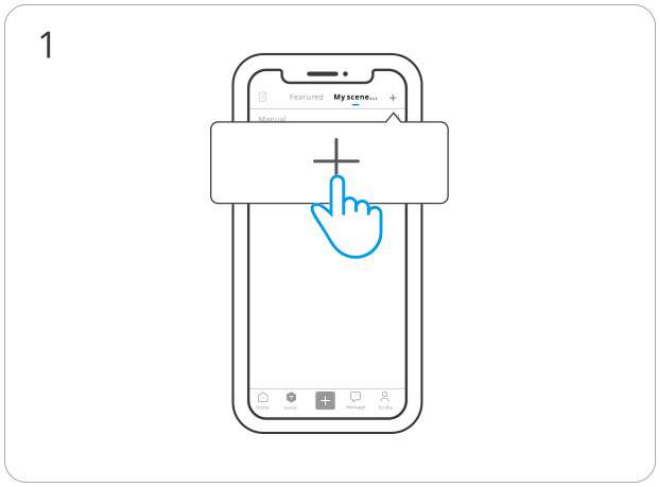

Select "+" on the scene page to add a new scene

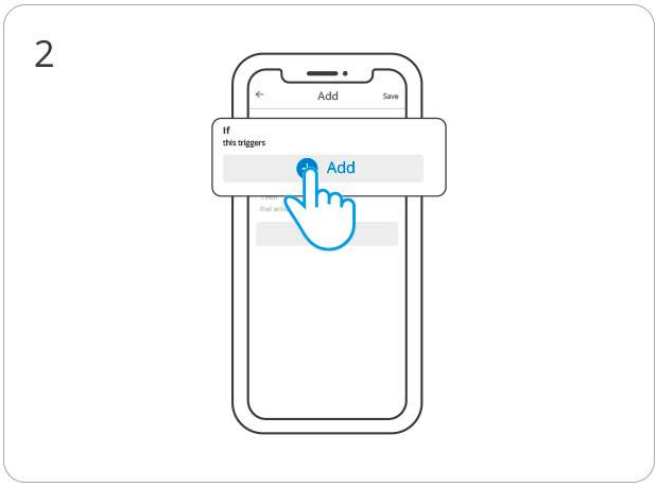

Select "Add" triggers

ITEAD - 苏登(2988816)

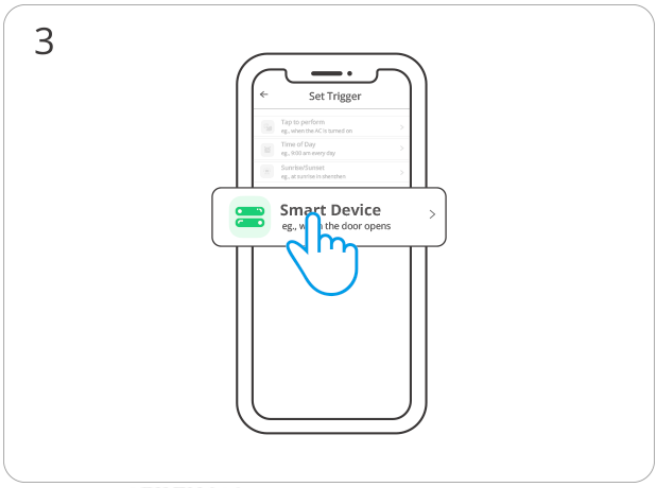

Select "Smart Device"

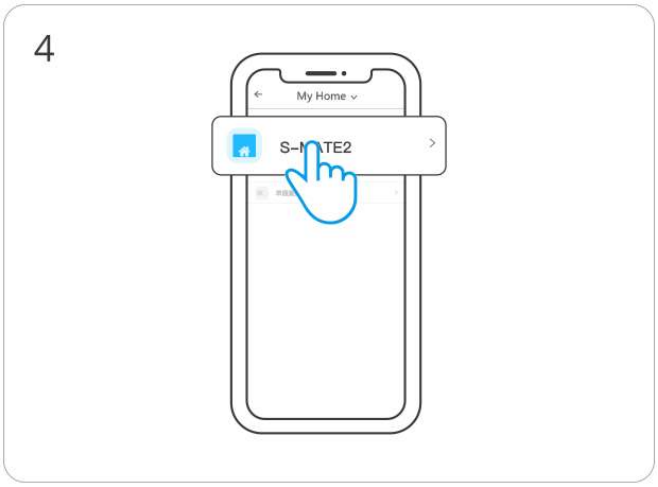

Select "S-MATE2" and follow the steps to configure the conditions

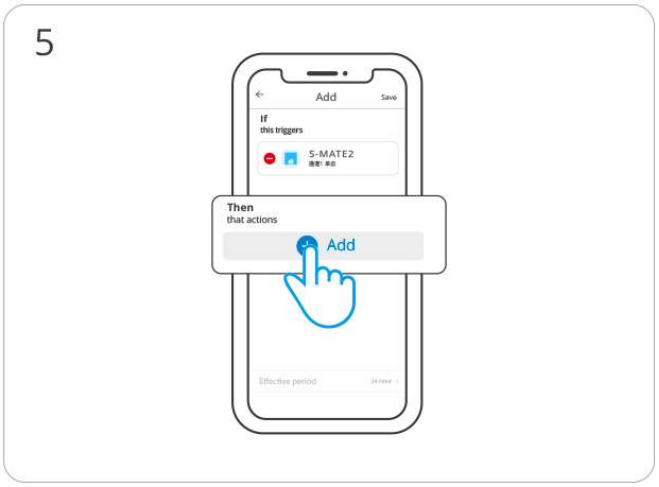

Add the linked device

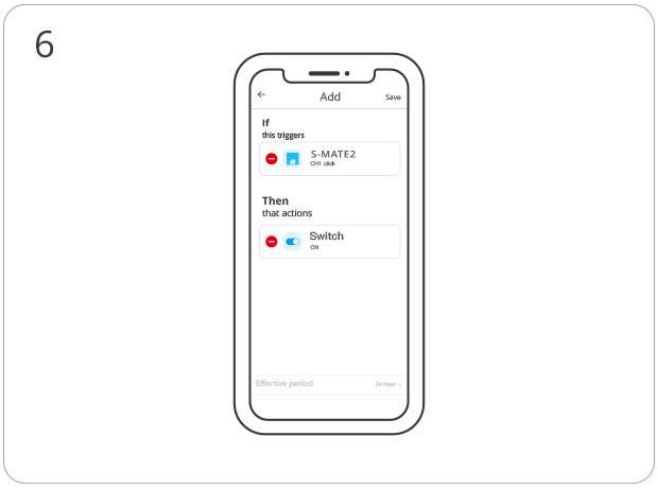

Complete the scene setup

Compatible eWeLink-Remote gateway

ITEAD - 苏登(2988816)

https://sonoff.tech/product-review/product-insight/what-is-ewelink-remote-control/

This device is connected to a regular switch and used together with a product that provides eWeLink-Remote gateway function. Click on the image or enter the website address to view compatible products.

FCC Warning

This device complies with part 15 of the FCC Rules. Operation is subject to the following two conditions:

(1) This device may not cause harmful interference, and

(2) This device must accept any interference received, including interference that may cause undesired operation.

2.Changes or modifications not expressly approved by the party responsible for compliance could void the user's authority to operate the equipment.

Note: This equipment has been tested and found to comply with the limits for a Class B digital device, pursuant to part 15 of the FCC Rules. These limits are designed to provide reasonable protection against harmful interference in a residential installation. This equipment generates, uses and can radiate radio frequency energy and, if not installed and used in accordance with

ITEAD - 苏登(2988816)

the instructions, may cause harmful interference to radio communications. However, there is no guarantee that interference will not occur in a particular installation. If this equipment does cause harmful interference to radio or television reception, which can be determined by turning the equipment off and on, the user is encouraged to try to correct the interference by one or more of the following measures:

—Reorient or relocate the receiving antenna.

—Increase the separation between the equipment and receiver.

—Connect the equipment into an outlet on a circuit different from that to which the receiver is connected.

—Consult the dealer or an experienced radio/TV technician for help.

FCC Radiation Exposure statement:

This equipment complies with FCC radiation exposure limits set forth for an uncontrolled environment. This equipment should be installed and operated with minimum distance of 20 cm between the radiator and your body. This transmitter must not be co-located or operating in conjunction with any other antenna or transmitter.

ISED Notice

This device contains licence-exempt transmitter(s)/receiver(s) that comply with Innovation, Science and Economic Development Canada's licence-exempt RSS(s).

Operation is subject to the following two conditions:

(1)This device may not cause interference.

(2)This device must accept any interference, including interference that may cause undesired operation of the device.

This Class B digital apparatus complies with Canadian ICES-003.

This device complies with RSS-247 of Industry Canada.

Operation is subject to the condition that this device does not cause harmful interference.

L'émetteur/récepteur exempt de licence contenu dans le présent appareil est conforme aux CNR d'Innovation, Sciences et Développement économique Canada applicables aux appareils radio

exempts de licence. L’exploitation est autorisée aux deux conditions suivantes :

(1)L’appareil ne doit pas produire de brouillage;

(2)L’appareil doit accepter tout brouillage radioélectrique subi, même si le brouillage est susceptible d’en compromettre le fonctionnement.

Cet appareil numérique de la Classe B conforme à la norme NMB-003 du Canada.

Cet appareil est conforme à la norme RSS-247 d'Industrie Canada. Le fonctionnement est soumis à la condition que cet appareil ne provoque pas d'interférences nuisibles.

ISED Radiation Exposure Statement

This equipment complies with ISED radiation exposure limits set forth for an uncontrolled environment.

This equipment should be installed and operated with minimum distance of 20 cm between the radiator and your body.

This transmitter must not be co-located or operating in conjunction with any other antenna or transmitter.

Cet équipement est conforme aux limites d’exposition aux rayonnements de la ISED établies pour unenvironnement non contrôé.

Cet équipement doit être installé et fonctionner à au moins 20cm de distance d’un radiateur ou de votre corps.

Cet émetteur ne doit pas être co-localisé ou fonctionner en conjonction avec une autre antenne ou un autre émetteur.

SAR Warning

Under normal use of condition, this equipment should be kept a separation distance of at least 20cm between the antenna and the body of the user.

Dans des conditions normales d’utilisation, cet équipement doit être maintenu à une distance d’au moins 20 cm entre l’antenne et le corps de l’utilisateur.

WEEE Warning

WEEE Disposal and Recycling Information All products bearing this symbol are waste electrical and electronic equipment (WEEE as in directive 2012/19/EU) which should not be mixed with unsorted household waste. Instead, you should protect human health and the environment by handing over your waste equipment to a designated collection point for the recycling of waste electrical and electronic equipment, appointed by the government or local authorities. Correct disposal and recycling will help prevent potential negative consequences to the environment and human health. Please contact the installer or local authorities for more information about the location as well as terms and conditions of such collection points.

EU Declaration of Conformity

Hereby, Shenzhen Sonoff Technologies Co., Ltd. declares that the radio equipment type S-MATE2 is in compliance with Directive 2014/53/EU. The full text of the EU declaration of conformity is available at the following internet address:

https://sonoff.tech/usermanuals

Do not ingest battery, Chemical Burn Hazard.

This product contains a coin/button cell battery.

ITEAD - 苏登(2988816)

If the coin/button cell battery is swallowed, it can cause severe internal burns in just 2 hours and can lead to death.

Keep new and used batteries away from children.

If the battery compartment does not close securely, stop using the product and keep it away from children.

If you think batteries might have been swallowed or placed inside any part of the body, seek immediate medical attention.

Replacement of a battery with an incorrect type that can defeat a safeguard (for example, in the case of some lithium battery types).

Disposal of a battery into fire or a hot oven, or mechanically crushing or cutting of a battery, that can result in an explosion.

Leaving a battery in an extremely high temperature surrounding environment that can result in an explosion or the leakage of flammable liquid or gas.

A battery subjected to extremely low air pressure that may result in an explosion or the leakage of flammable liquid or gas.

ITEAD - 苏登(2988816)

Scatola	Manuale
PAP 21	PAP 22
Carta	Carta
RACCOLTA DIFFERENZIATA	
Verifica le disposizioni del tuo Comune. Separa le componenti e conferiscile in modo corretto.	

For CE Frequency:

Operation Frequency:2426MHz

RF Output Power:≤10dBm

ITEAD - 苏登(2988816)

Shenzhen Sonoff Technologies Co., Ltd.

3F & 6F, Bldg A, No. 663, Bulong Rd, Shenzhen, Guangdong, China

ZIP code: 518000

Website: sonoff.tech
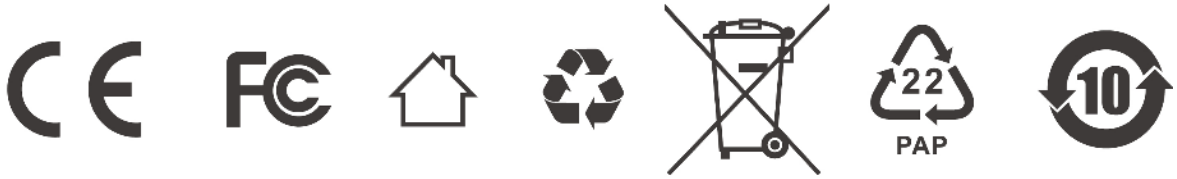
Service email: support@itead.cc